Hybrid LCC-VSC Bipolar System for DC Power Tapping Studies

Persand M., Dr. Kish G., Dr Yuan Li

University of Alberta

November 2nd 2022

High Voltage Direct Current Transmission

- Line Commutated Converter (LCC) is most mature and globally prevalent HVDC converter technology, well suited for efficient transfer of bulk power over long distances
- Newer voltage sourced converter (VSC) technology, namely the modular multilevel converter (MMC), offers many technical benefits such as commutation failure elimination and dynamic reactive power support
- With advancements in VSC technologies such as the MMC, augmenting backbone LCC-HVDC corridors with VSC-based DC tapping stations is a growing point of interest

HVDC Line Power Tapping – Concept of DC Tapping

- Tapping is attractive proposition to electrify remote communities by sourcing a “small” amount of power from existing HVDC systems
- Two main types of tapping : AC tapping and DC tapping [1]
- Downstream converter station in DC tapping allows for a more flexible distribution/generation network with introduction of MVDC

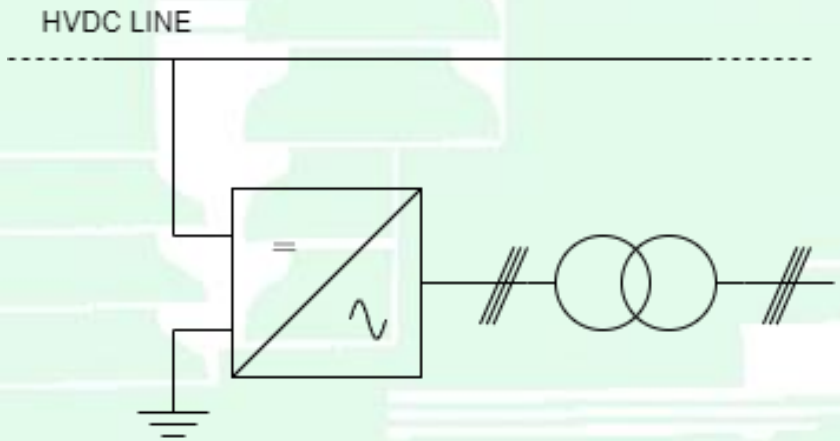

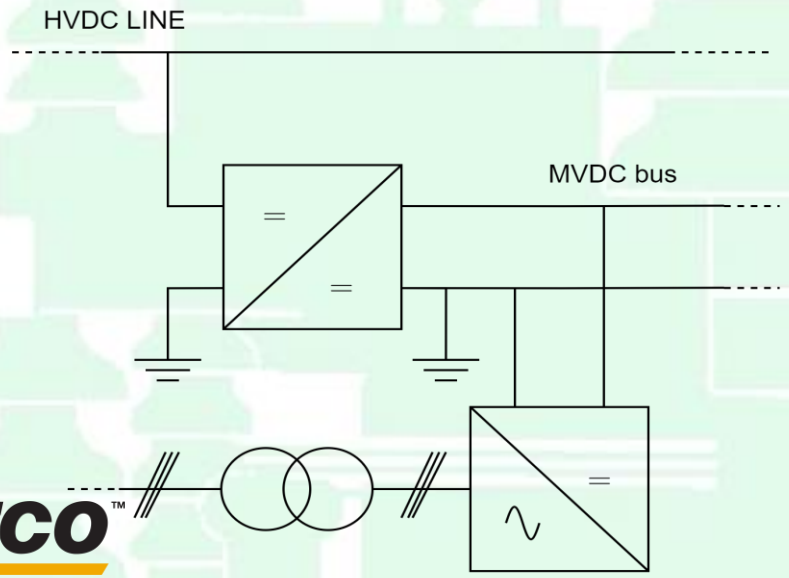

Literature Review

A few DC tapping studies have been carried out in the past. For example:

- A modular resonant dc–dc converter with high step-down ratio for tapping power from hvdc systems [2]
- Modular multilevel dc–dc power converter topology with intermediate medium frequency ac stage for hvdc tapping [3]
- Power tapping from a current-source hvdc link using modular multilevel converters [4]

Motivation & Objectives

- The majority of research regarding power tapping have been carried out involving single stage AC tapping on existing LCC-HVDC systems
- The few works on DC tapping focus more on the DC-DC converter proposal and design, rather than system level integration studies
- The main objective is to develop a benchmark study system for DC power tapping and renewable energy integration on a bipolar LCC-HVDC link. This study system will be used to validate the feasibility of independent pole power tapping under various scenarios

Hybrid LCC-VSC Bipole HVDC System

Hybrid Study System Developed on RTDS Platform

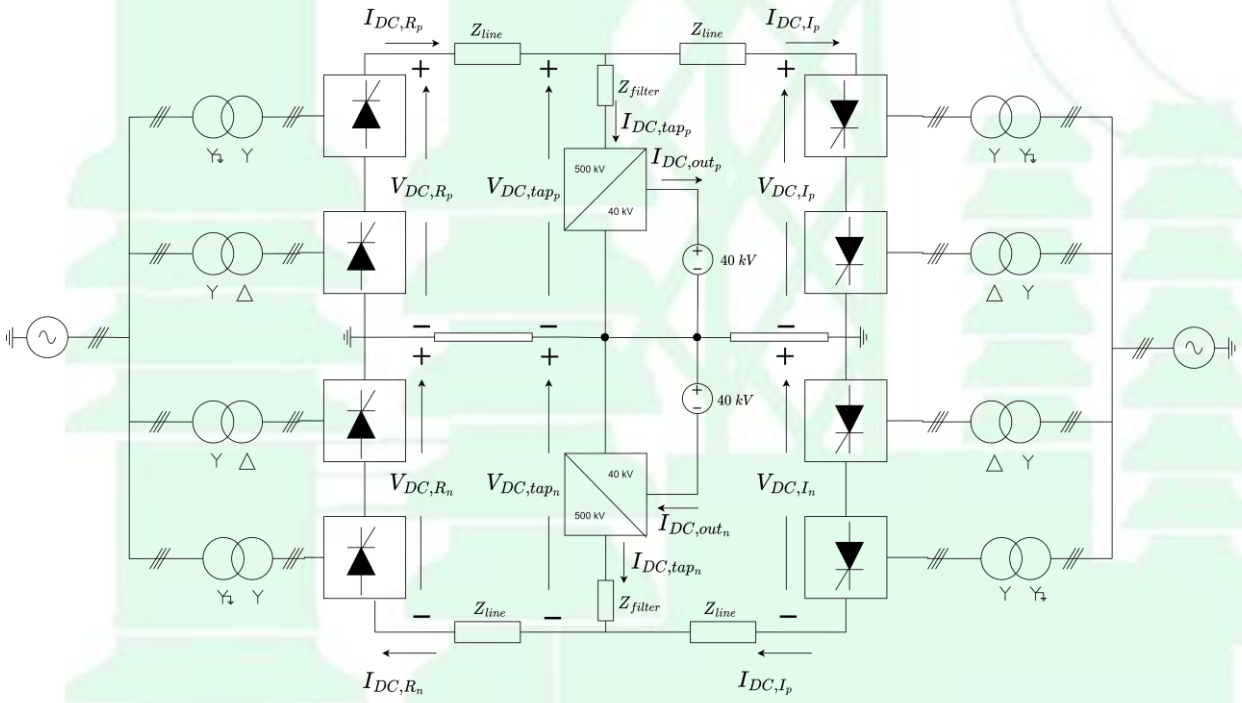

- A detailed real time model of a 3 GW, ±500 kV bipole LCC system augmented with two DC tapping stations was created by using the bipole HVDC system available through RTDS.
- This offers a flexible system capable of changing power flow direction & demands
- DC Tap rating = 75 MW per pole (5% of line rating)
- DC voltage step ratio = 500/40 kV (12.5:1)

Hybrid Study System Developed on RTDS Platform

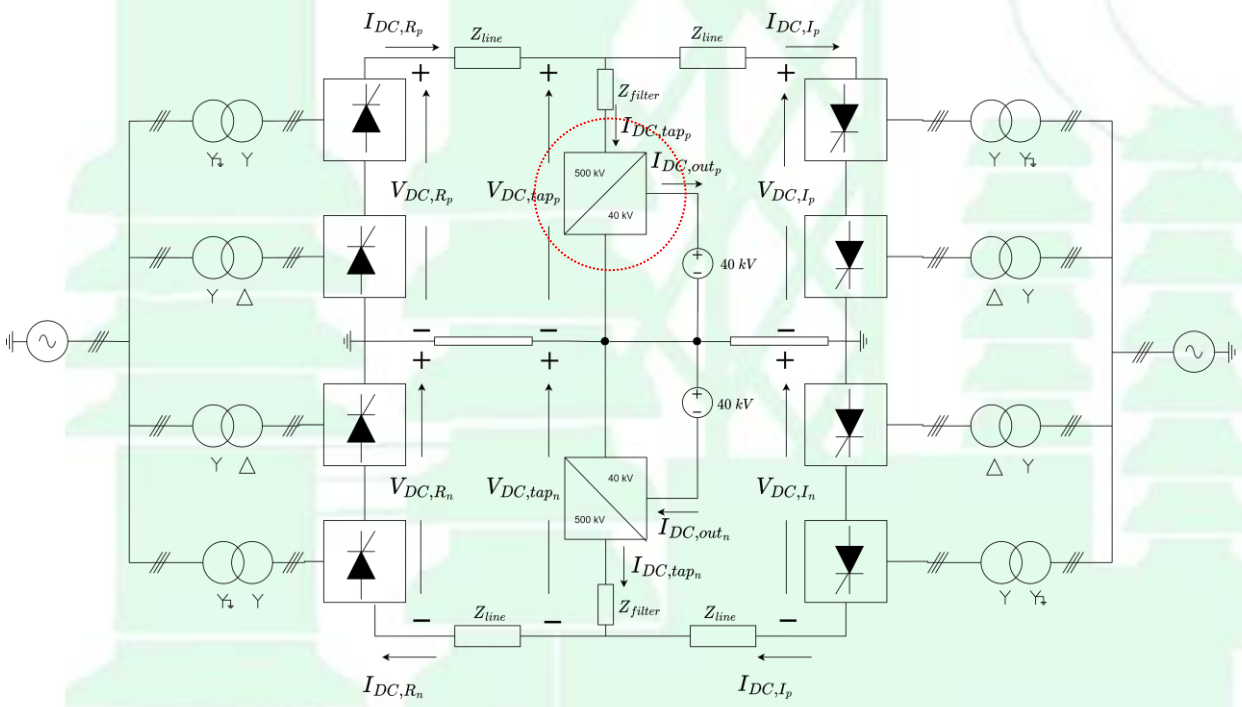

- A detailed real time model of a 3 GW, ±500 kV bipole LCC system augmented with two DC tapping stations was created by using the bipole HVDC system available through RTDS.
- This offers a flexible system capable of changing power flow direction & demands
- DC Tap rating = 75 MW per pole (5% of line rating)
- DC voltage step ratio = 500/40 kV (12.5:1)

Hybrid Study System Developed on RTDS Platform

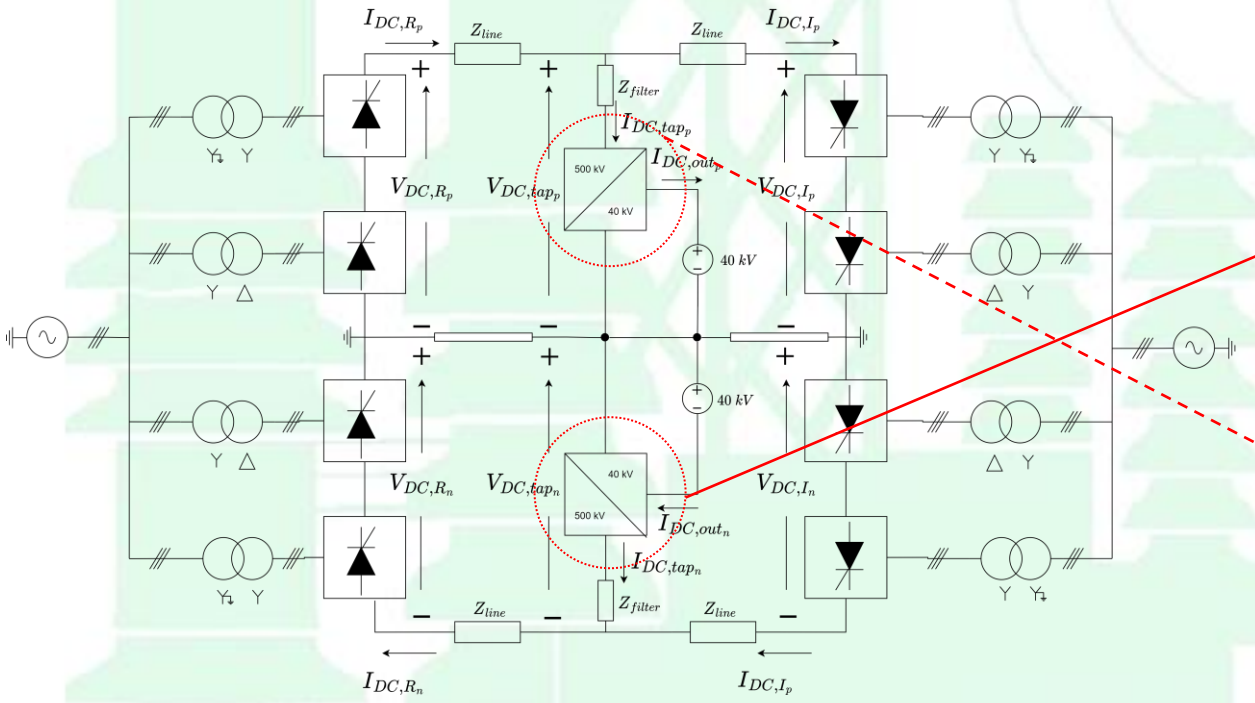

Processor cores

GTFPGA Units (3)

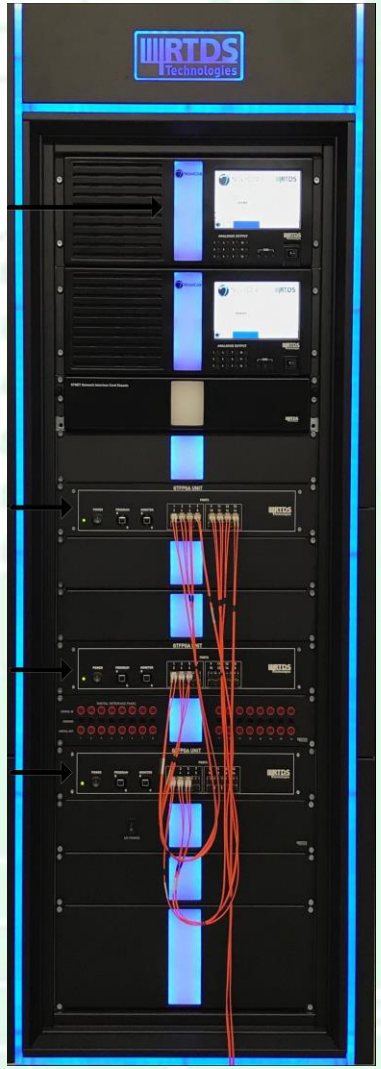

LCC-HVDC Station Controls

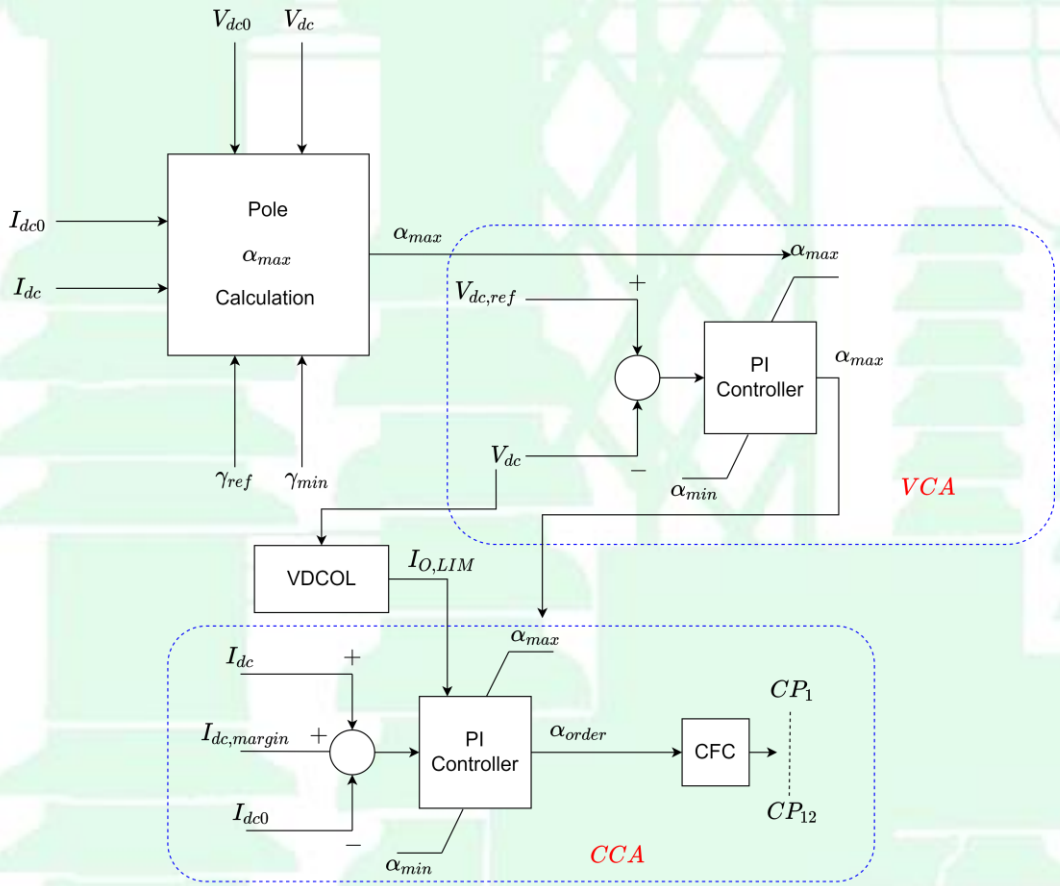

Pole αmax Calculation	Involved in current and voltage control
Voltage Control Amplifier (VCA)	Controls voltage when DC link voltage drops below threshold
Current Control Amplifier (CCA)	Normally run by rectifier. Inverter runs CCA when current drops a certain amount
Converter Firing Controls (CFC)	Generates firing pulses
Voltage Dependent Current Order Limit	Reduces current order when low voltages are detected

M2DC-CT Tapping Stations [5]

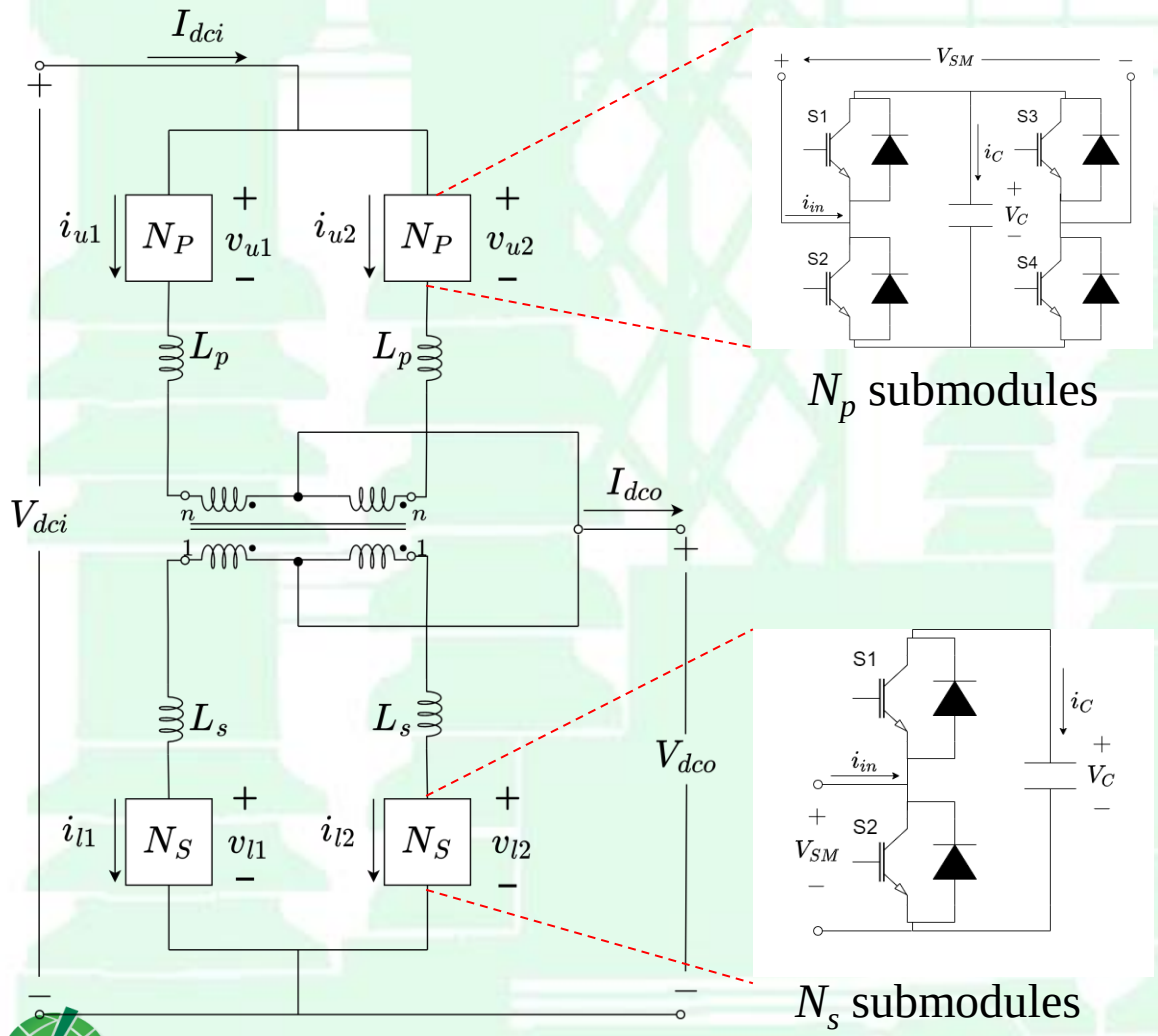

Parameter	Description	Value
$P_{dc,rated}$	Rated Power of each M2DC-CT	75 MW
V_{dci}	Input DC voltage	500 kV
V_{dco}	Output DC voltage	40 kV
N_p, N_s	Number of Submodules (SMs) in upper and lower arms	460 (FBSM), 40 (HBSM)
L_p	Upper arm inductance	50 mH
L_s	Lower arm inductance	10 mH
C_p	Upper arm capacitance	1 mF
C_s	Lower arm capacitance	12.5 mF
f	Fundamental frequency	150 Hz

DC Tapping Converter Input Filter Design

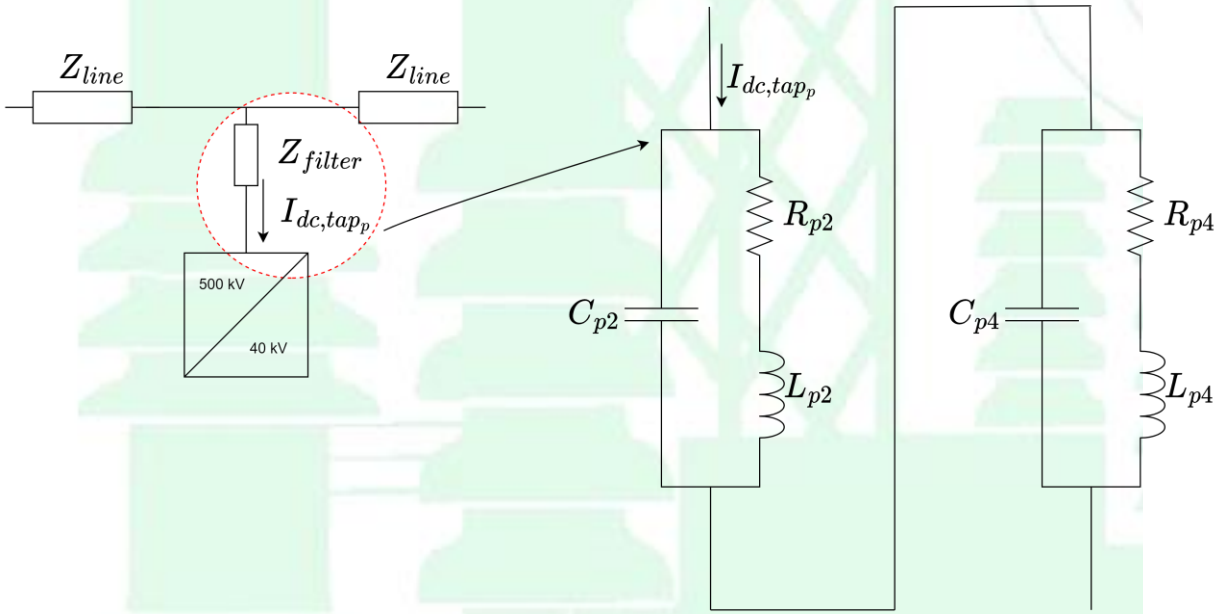

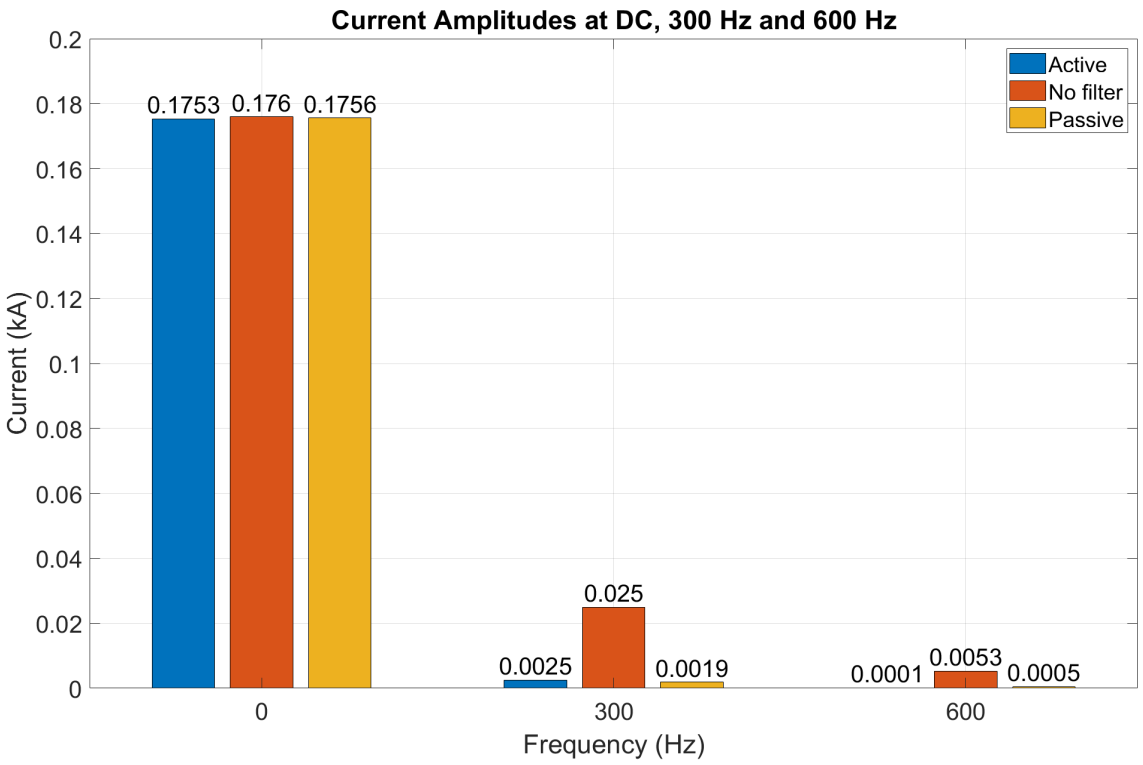

- Both active and passive filters provided the similar operation.

Study Results

Study Results

The main results of the power flow studies involved 3 scenarios:

1. Energization of the Tapping Converters
2. Symmetrical Power Tapping
3. Asymmetrical Power Tapping

Energization of the LCC-HVDC System

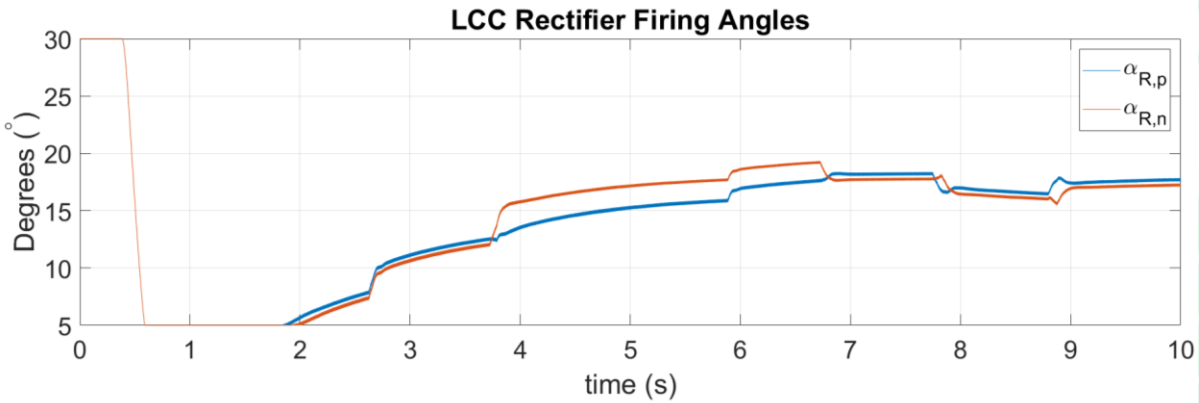

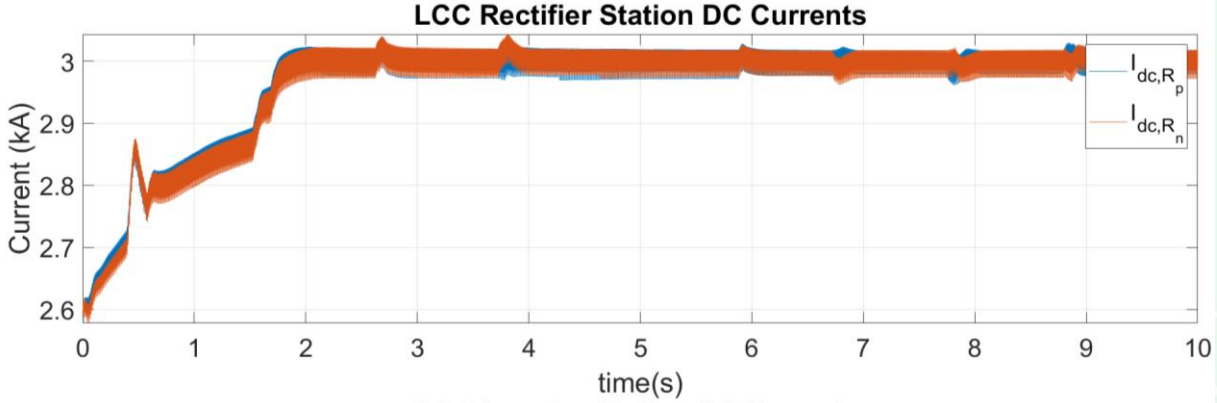

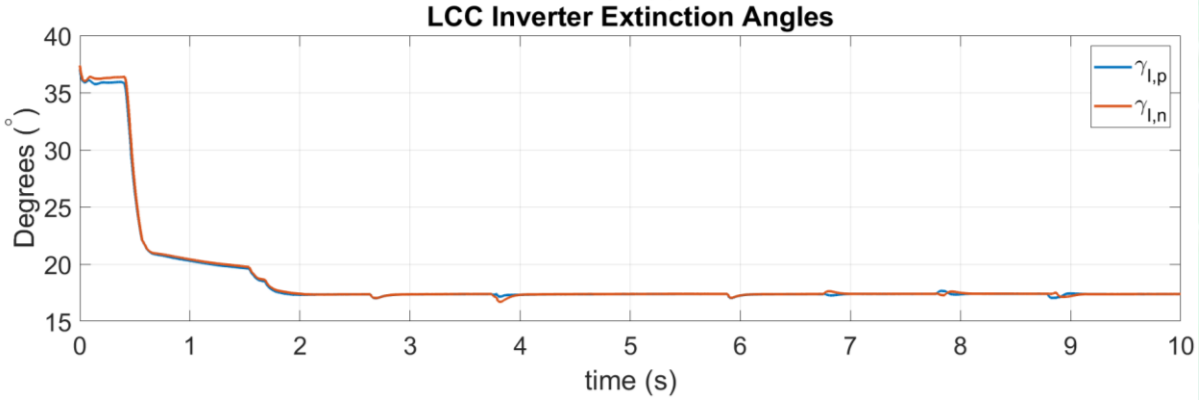

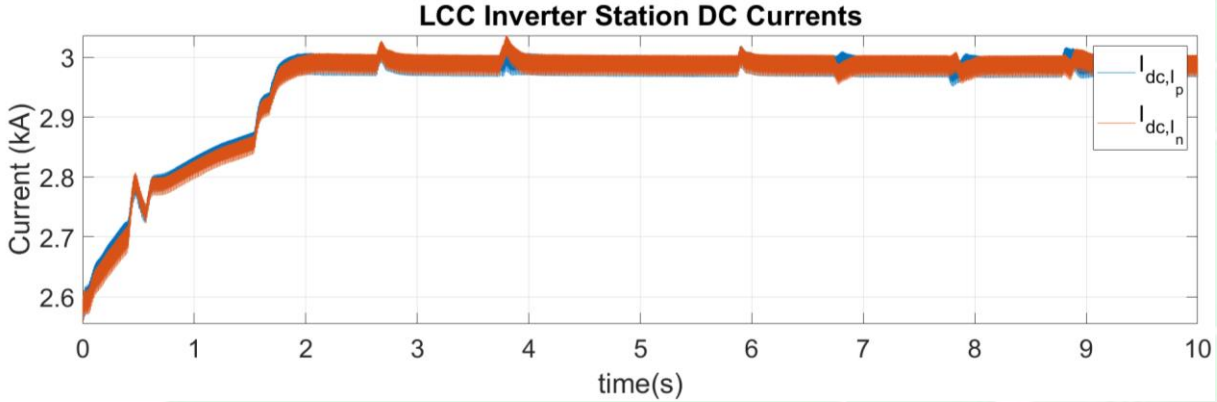

- Energization of the LCC system followed the LCC control mechanisms with no changes with/without the stations connected.

Energization of the M2DC-CT Tapping Stations

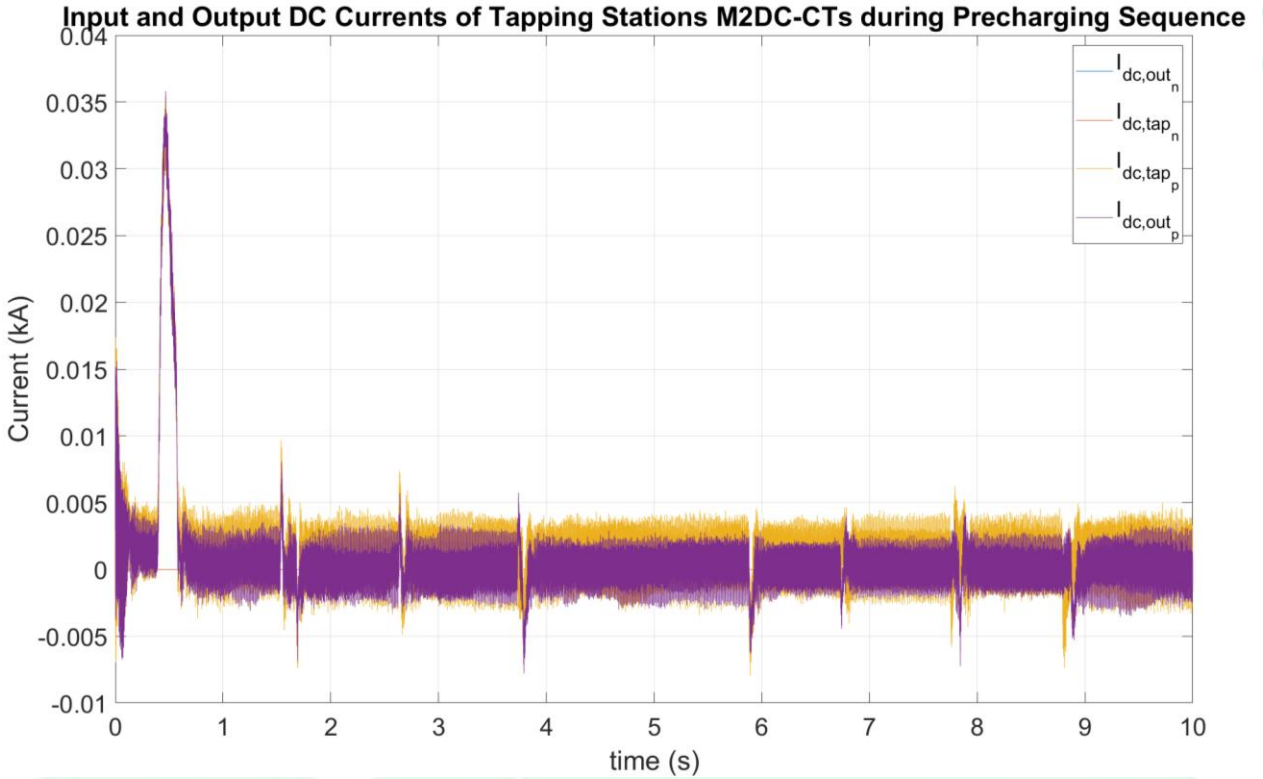

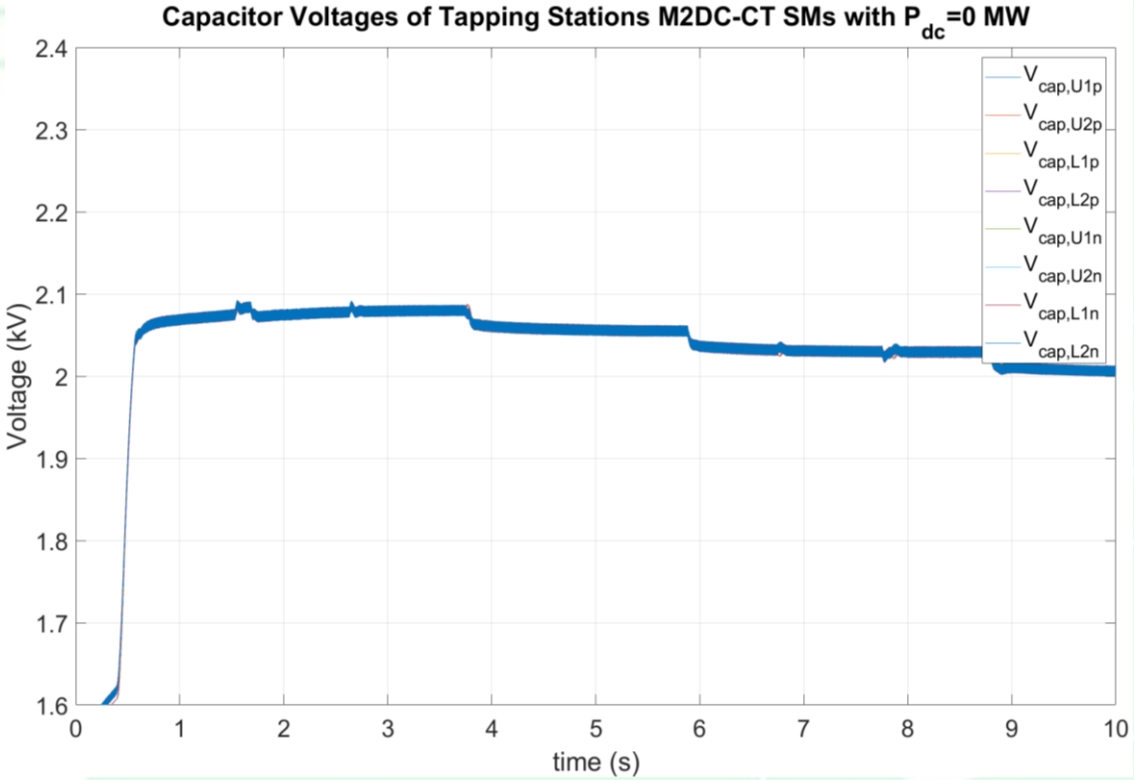

- Energization strategy different from conventional tapping solutions such as parallel DC-AC MMC taps, due to effective capacitance difference between the upper and lower arms (series DC current common to the arms)

Symmetrical Power Tapping Between Poles

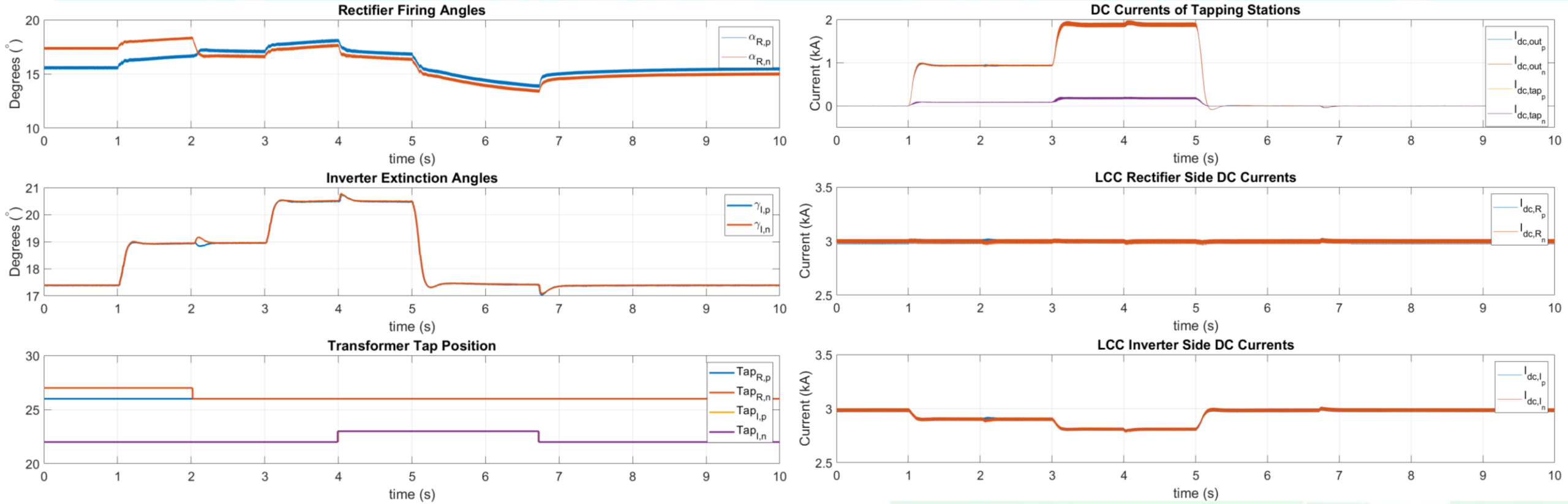

- Power was increased from 0 to 37.5 MW and then to 75 MW and at t=5s, power demand was set to 0 MW again.

Asymmetrical Power Tapping Between Poles

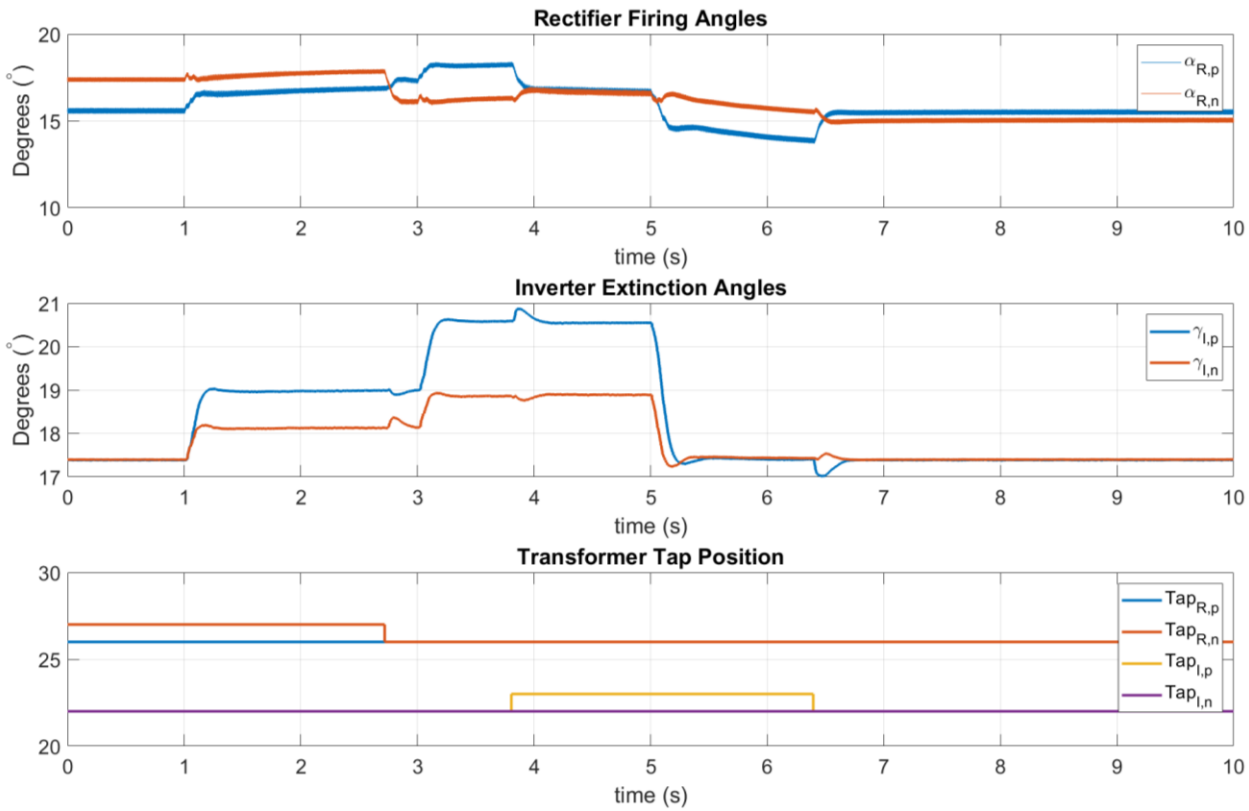

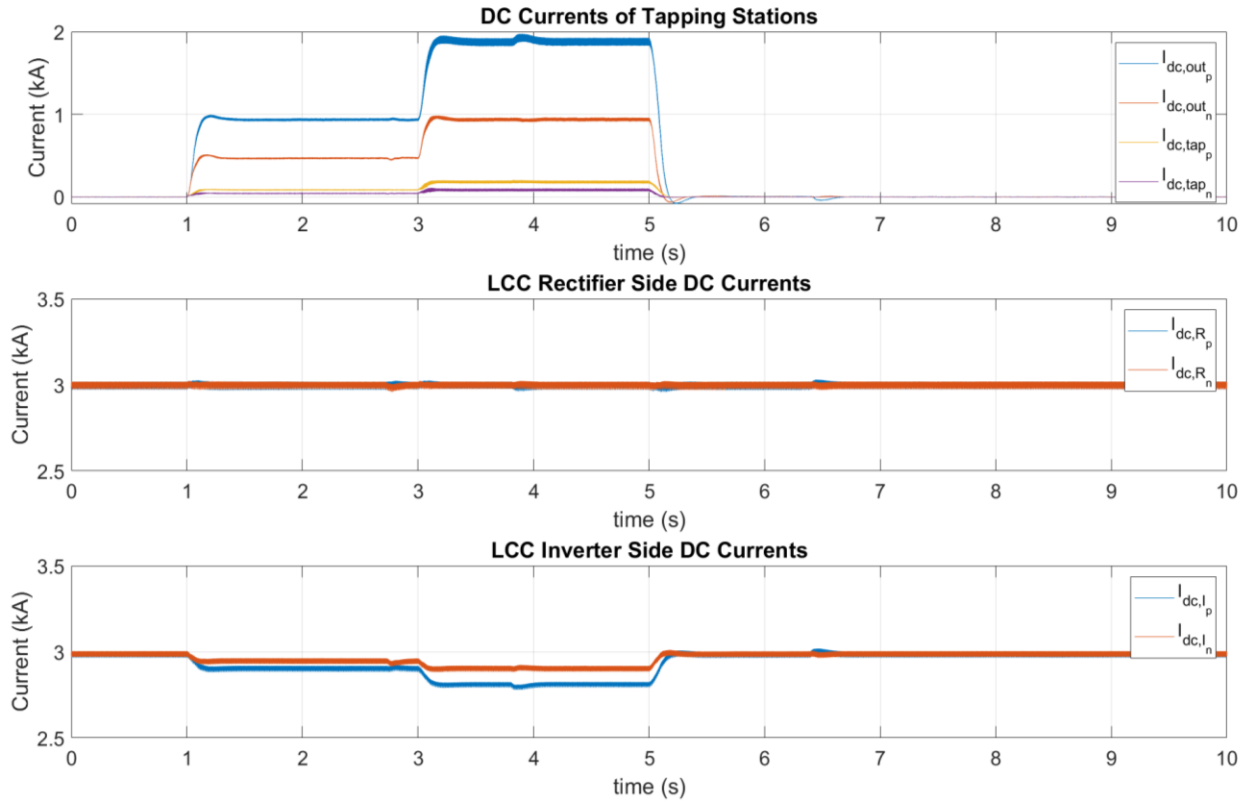

- Tapping different power amounts between poles can be done but forces some current to flow in the LCC-HVDC neutral return path

Conclusions

- Verified that the LCC-HVDC bipole system modes of operation during DC power tapping remain unchanged at any power demand level up to the rated power of 75 MW
- Energization of DC tapping stations requires balancing controls for capacitor voltages, to accommodate unequal arm capacitances (such a situation does not occur with conventional DC-AC MMC taps)
- Confirmed that the LCC-HVDC system can tolerate unbalanced DC power tapping between poles, however, the neutral return path between tapping stations and LCC inverters must carry some current
- Comprehensive study system designed to accommodate future studies such as pole power reversal and AC, HVDC and MVDC faults

THANK YOU

References

[1] “Dc-dc converters in hvdc grids and for connections to hvdc systems,” CIGRE B4-76, Tech. Rep. 827, 2020.

[2] E. C. Mathew, R. Sharma, and A. Das, “A modular resonant dc–dc converter with high step-down ratio for tapping power from hvdc systems,” IEEE Transactions on Industrial Electronics, vol. 68, no. 1, pp. 324–332, 2021.

[3] N. Parida and A. Das, “Modular multilevel dc–dc power converter topology with intermediate medium frequency ac stage for hvdc tapping,” IEEE Transactions on Power Electronics, vol. 36, no. 3, pp. 2783–2792, 2021.

[4] A. C and S. Maiti, “Power tapping from a current-source hvdc link using modular multilevel converter,” in 2016 IEEE International Conference on Power Electronics, Drives and Energy Systems (PEDES), 2016, pp. 1–5.

[5] Y. Li and G. J. Kish, “The modular multilevel dc converter with inherent minimization of arm current stresses,” IEEE Transactions on Power Electronics, vol. 35, no. 12, pp. 12 787–12 800, 2020.